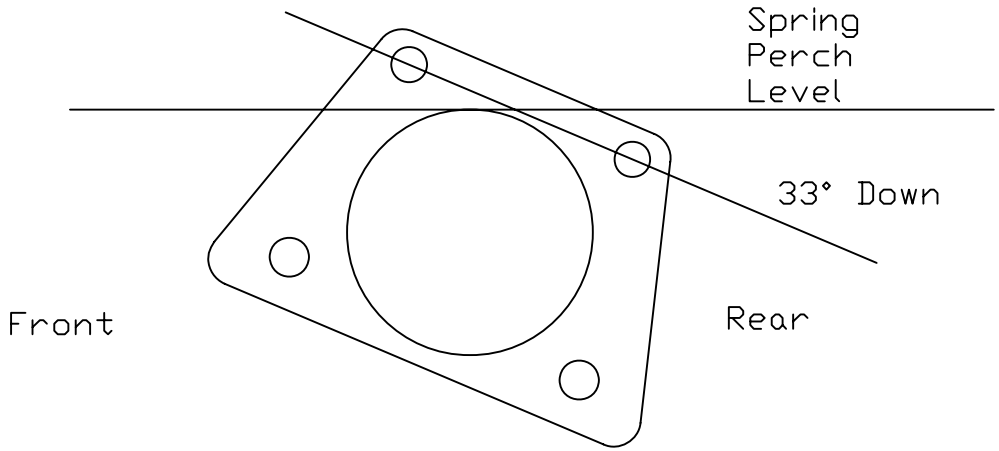

Left side (driver)

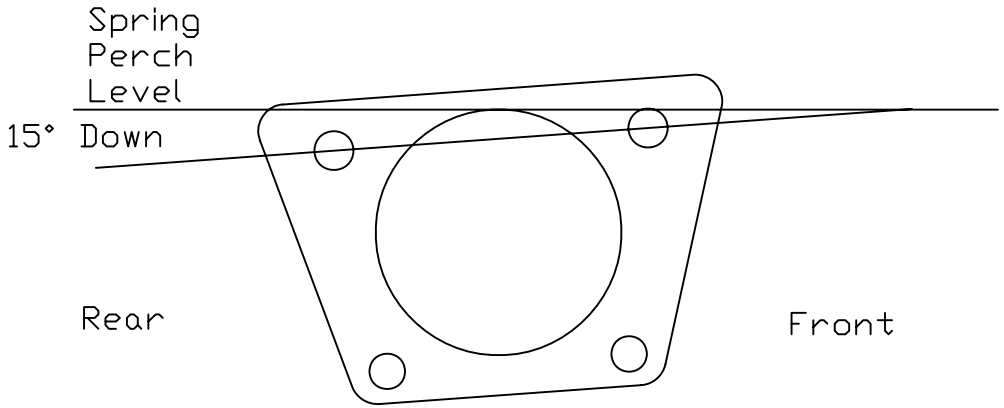

Right side
(passenger)